T110WBL96

REC'D SEP 11 2003

REVISIONS				
ZONE	REV	DESCRIPTION	DATE	APPROVED
	A	Release for Tooling	05.07.02	

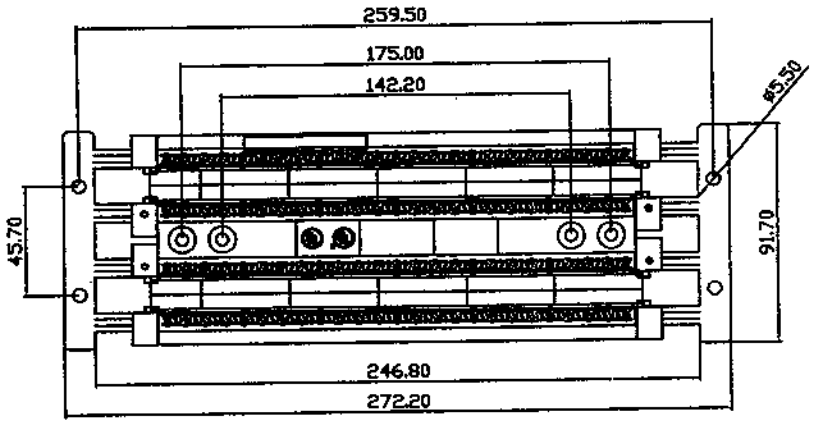

ITEM	PARTS DESCRIPTION	Q'TY	P/N
1	~~100~~ 96PR BASE WITH LEG	1	LP1340
2	24 PR INSERT	4	LP1664
3	INDEX HOLDER	2	LP1027/LH300046
4	110C-4-C6	24	LP1663/LG000127

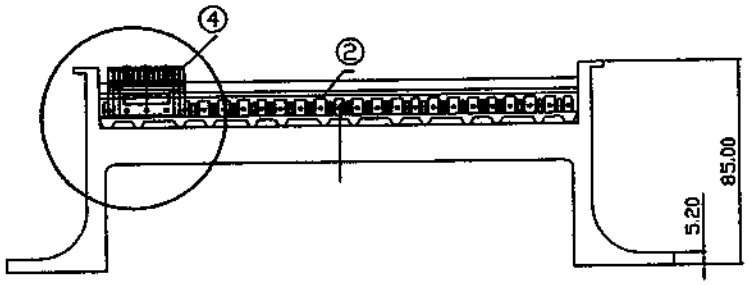

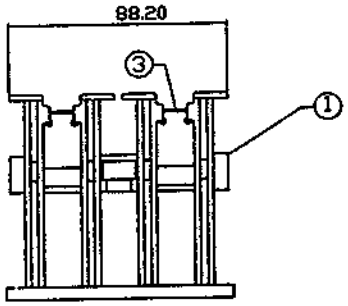

XMI-DYNA100CST

H110BA6K-96-XXX-1

UNLESS OTHERWISE SPECIFIED: TOLERANCES DECIMAL -.20 ±0.1mm OVER .20-.60 ±0.15mm OVER .60-.- ±0.2mm ANGULAR ±0°30'	PROJECT ID 110BA6K-96-XXX-1 110BA6K-96-XXX	HELLERMANN TYTON	
	FILE Z1049	DATE	TITLE 96 PAIRS BASE WITH LEG
MATERIAL PC	DRAWN SYBIL	05.07.02	
SURFACE	CHECK		SIZE A1 / DRAWING NUMBER Z1049 / PART NUMBER / REV B
FINISH	APPROVED		SCALE 1 : 1 / UNIT / SHEET 1 of 1

G10AWB-96