THIS COPY IS PROVIDED ON A RESTRICTED BASIS AND IS NOT TO BE USED IN ANY WAY DETRIMENTAL TO THE INTERESTS OF PANDUIT CORP.

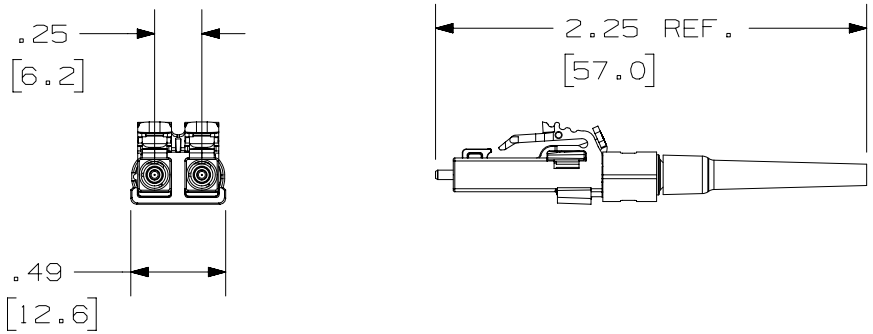

PANDUIT PART NUMBER	FIBER TYPE
FLCDMC5BLY	50/125um MULTIMODE
FLCDMC6BLY	62.5/125um MULTIMODE
FLCDMC6EIY	62.5/125um MULTIMODE
FLCDMCXAQY	50/125um OM3 MULTIMODE
FLCDSCBUY	9/125um SINGLEMODE

NOTES:
1. SEE CATALOG FOR ADDITIONAL PART NUMBER SUFFIXES TO INDICATE COLOR AND/OR PACKAGE QUANTITY.
2. ACCEPTS 50/125um, 62.5/125um, 50/125 OM3 MULTIMODE OR 9/125um SINGLEMODE 900um BUFFERED GLASS OPTICAL FIBER.
3. FULLY COMPLIES WITH THE FIBER OPTIC CONNECTOR PERFORMANCE REQUIREMENTS AS SPECIFIED BY TIA/EIA-568-B.3.
4. MATERIAL:
   BODY/HARDWARE: PLASTIC
   BOOT: THERMOPLASTIC RUBBER
   FERRULE: ZIRCONIA CERAMIC
5. DIMENSIONS IN [ ] ARE METRIC [mm].

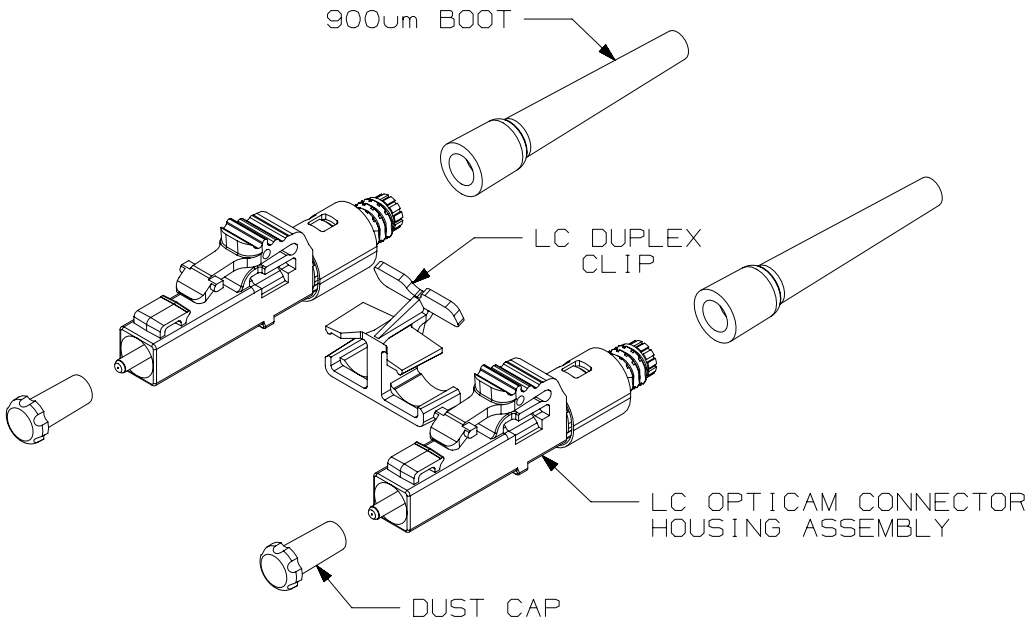

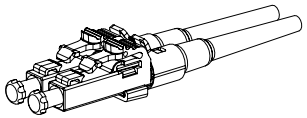

PART NUMBER
FLCDMC5BLY, FLCDMC6BLY, FLCDMC6EIY, FLCDMCXAQY, FLCDSCBUY

TITLE
OPTICAM DUPLEX LC CONNECTOR WITH 900um BOOTS

CUSTOMER DRAWING

ITEM REVISION NAME: M01801YD/03

DATASET FILE NAME: M01801YD_DC_DUP/03D

UNLESS OTHERWISE SPECIFIED, DIMENSIONAL TOLERANCES ARE: IN [mm]
.X ± .XXX ±
.XX ± ANGLES ±
THIRD ANGLE PROJECTION

MATERIAL:

DRAWING NUMBER: 01801-33

DRAWN BY	DATE	CHK	SCALE		SIZE
MC	02-15-06	RTFI	NONE	SHT 1 OF 1	A

REV	DATE	BY	CHK	APR	DESCRIPTION	ECN
3	6/17/15	JSP	WJM	JGSW	A. REVISED DRAWING TITLE BLOCK.	01801-33

D10100DA/14